Institute of Technology of Cambodia

Department of Industrial and Mechanical Engineering

Subject: Electronics

TOPIC: Auto Parking Barrier

Lecture: **M. TEM LYHOR (Couse et TD)**

Group: I4-GIM-A1

Student:	**ID**
1. CHAO SIVCHHUONG	e20220409
2. CHUO SOTHEARA	e20220399
3. BAN THUNPISEY	e20220860

Year 2025-2026

1. INTRODUCTION

The auto parking project using Arduino demonstrates how embedded systems can automate vehicle parking. By combining an Arduino microcontroller with ultrasonic sensors and motor drivers, a prototype car can detect obstacles and guide itself into a parking slot without manual control. This project highlights the role of automation in improving safety, efficiency, and smart transportation.

2. OBJECTIVE

The objective of this project is to create an Arduino-based auto parking system that uses sensors and programmed logic to automatically park a prototype car.

3. COMPONENTS

- Arduino uno R3

- Breadboard

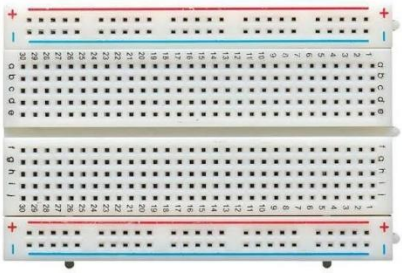

- Ultrasound Sensor

- Resistor

- Micro Servo

- Jumper wir

4. CIRCUIT CONNECTION

- VCC → 5V pin on Arduino
- GND → GND pin
- Signal wire → D6
- TRIG → D9
- ECHO → D10
- TRIG → D9
- VCC → 5V pin
- GND → GND pin
- Red LED → D3 with resistor to GND
- Green LED → D4 with resistor to GND

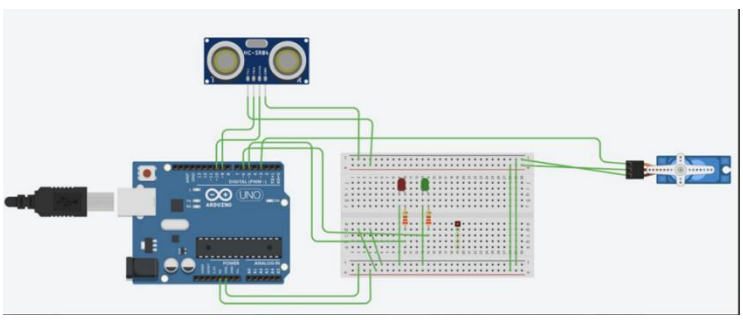

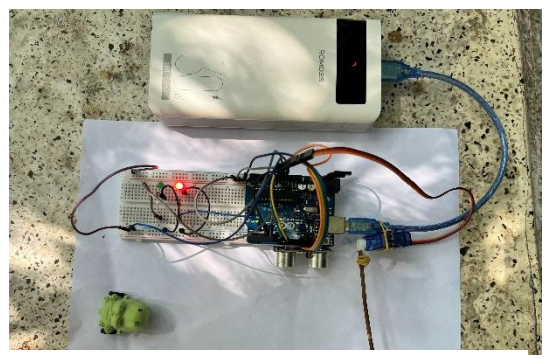

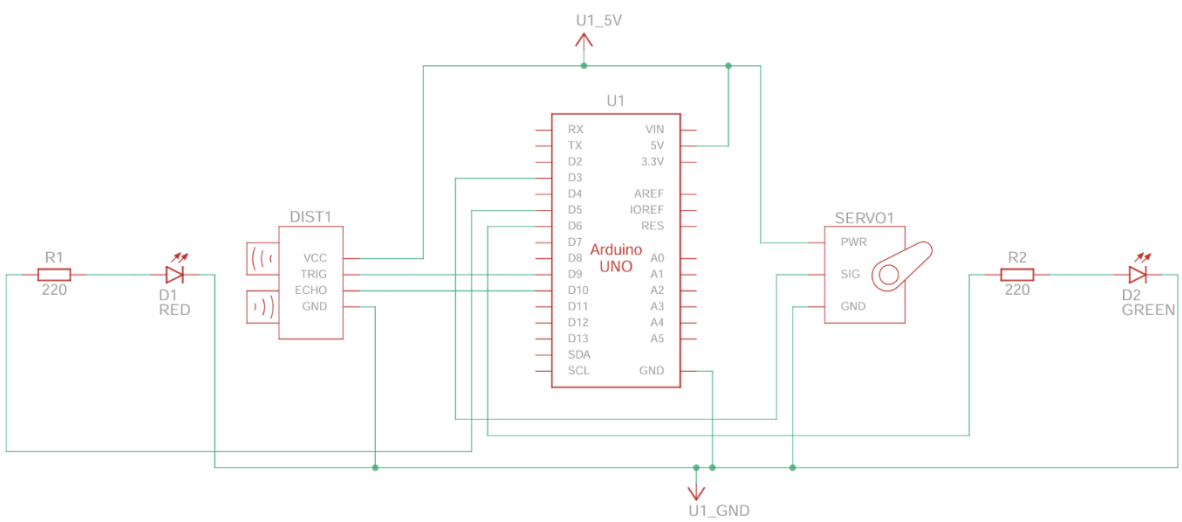

5. CODE

```
#include <Servo.h>

const int trigPin = 9;
const int echoPin = 10;
const int redLED = 5;
const int greenLED = 6;
const int servoPin = 3;

Servo gateServo;

int vehicleCount = 0;         // Counter for motorcycles
bool vehicleDetected = false; // Flag to avoid double counting

void setup() {
  pinMode(trigPin, OUTPUT);
  pinMode(echoPin, INPUT);
  pinMode(redLED, OUTPUT);
  pinMode(greenLED, OUTPUT);

  gateServo.attach(servoPin);
  gateServo.write(0); // Gate starts closed

  Serial.begin(9600);
  Serial.println("System Ready");
}

void loop() {
  // Trigger ultrasonic pulse
  digitalWrite(trigPin, LOW);
  delayMicroseconds(2);
  digitalWrite(trigPin, HIGH);
  delayMicroseconds(10);
  digitalWrite(trigPin, LOW);
```

```
  // Measure echo time
  long duration = pulseIn(echoPin, HIGH, 30000);
  float distance = duration * 0.034 / 2;

  Serial.print("Distance: ");
  Serial.println(distance);

  if (distance > 0 && distance < 30) {
    if (!vehicleDetected) {
      vehicleCount++;           // Count new motorcycle
      vehicleDetected = true;   // Prevent double count

      digitalWrite(greenLED, HIGH);
      digitalWrite(redLED, LOW);
      gateServo.write(90);      // Open gate

      Serial.println("Welcome to ITC!");
      Serial.print("Count: ");
      Serial.println(vehicleCount);

      delay(2000);              // Allow entry
      gateServo.write(0);       // Close gate
    }
  } else {
    vehicleDetected = false;    // Reset detection
    digitalWrite(greenLED, LOW);
    digitalWrite(redLED, HIGH);
    gateServo.write(0);
  }

  delay(200);
}
```

Code Explanation

- First line: we call the library of servo to use

Pin Setup

- Pin Mode (trig Pin, OUTPUT) → Configures TRIG pin of ultrasonic sensor to send pulses.
- Pin Mode (echo Pin, INPUT) → Configures ECHO pin to receive reflected signal.
- Pin Mode (red LED, OUTPUT) → Sets red LED as output (indicates gate closed / unsafe).
- Pin Mode (green LED, OUTPUT) → Sets green LED as output (indicates gate open / safe).
- Gate Servo. attach(Servo Pin) → Connects servo motor to Arduino for gate control.
- Serial.begin(9600) → Starts Serial Monitor for debugging and status messages.

Loop Logic

- Ultrasonic Sensor Trigger
  - Sends a short pulse from TRIG and measures echo time on ECHO.
  - Converts echo time into distance (cm)

- Vehicle Detection
  - If distance < 30 cm → vehicle detected.
  - If no vehicle → system stays in waiting mode.
- Gate Control

When vehicle detected:

  - Green LED ON, Red LED OFF.
  - Servo rotates to 90° → gate opens.
  - Vehicle count increases by 1.
  - After delay, servo returns to 0° → gate closes.

When no vehicle:

  - Red LED ON, Green LED OFF.
  - Servo stays at 0° → gate closed

6. CONCLUSION

The Arduino auto parking project shows how sensors and a servo motor can automate parking. It proves that embedded systems can improve safety, efficiency, and smart transportation with simple components.

- The ultrasonic sensor detects vehicles within 30 cm.
- The servo motor opens/closes the gate automatically.
- LEDs show gate status (red = closed, green = open).